Parts Manual

Mfg. No: 1016-0
MEGA 2,500

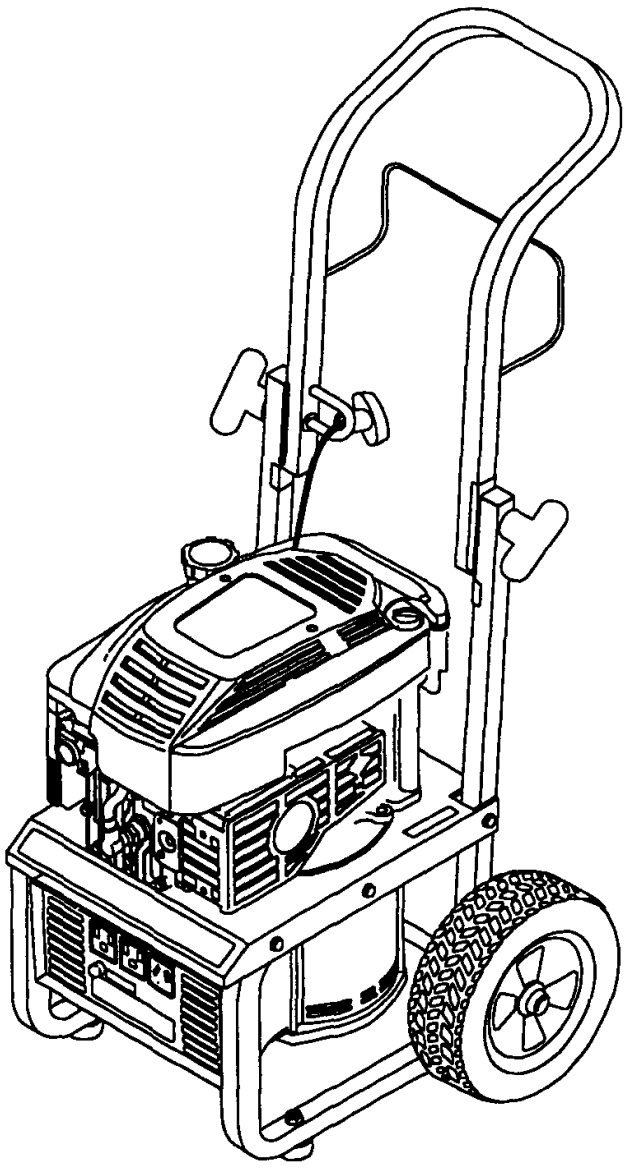

Copyright © Briggs & Stratton. All Rights reserved

Model Components

Page

Control Panel. 4
Electrical Data. 6
Generator. 8
Torque Specification Chart. 10

Not For Reproduction

Copyright © Briggs & Stratton. All Rights reserved

Control Panel

Note: Unless noted otherwise, use the standard torque specifications

Mfg. No: 1016-0

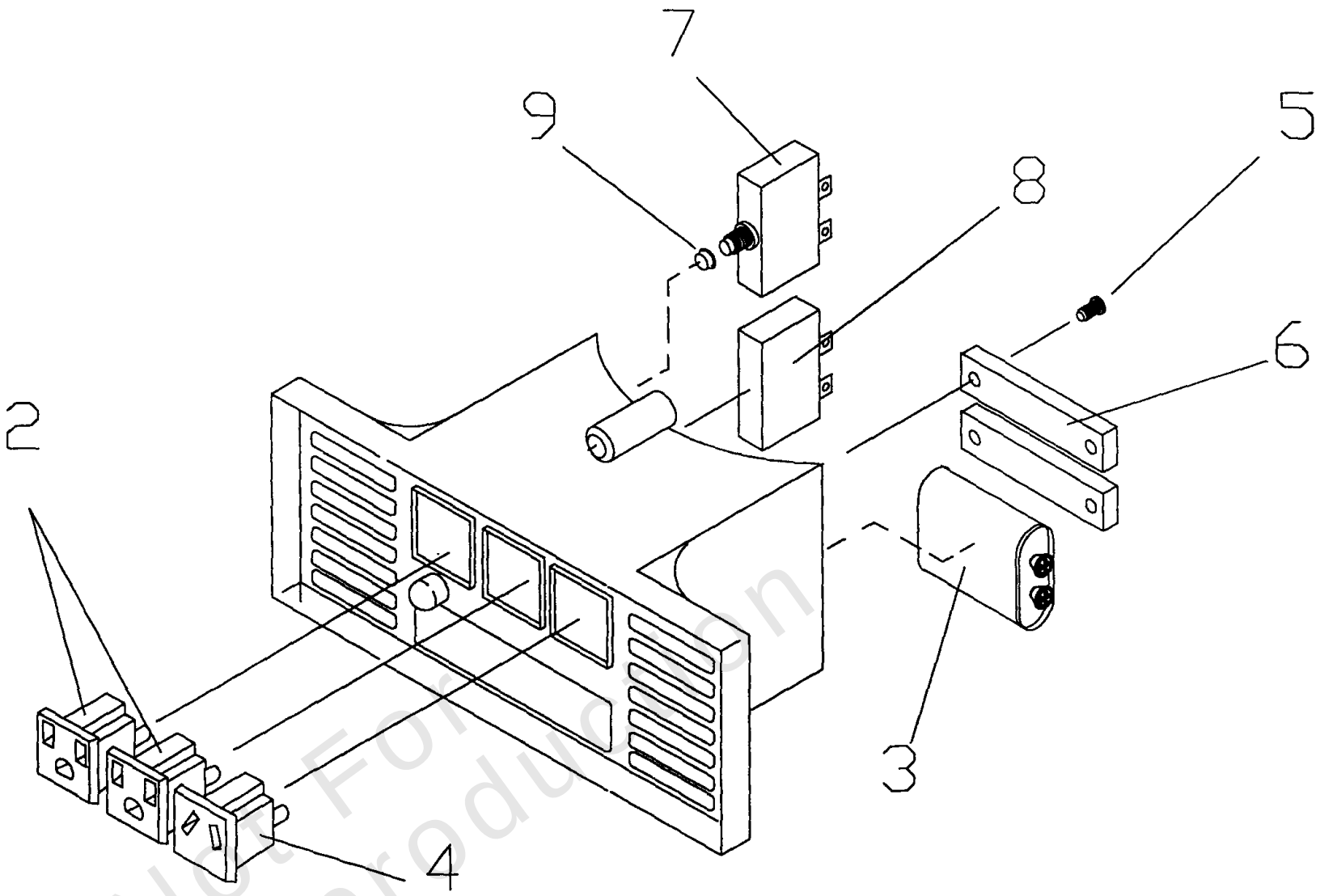

Not For Reproduction

Copyright © Briggs & Stratton. All Rights reserved

Control Panel

REF NO	PART NO	QTY	DESCRIPTION
1	99837	1	PANEL, Control
2	66818	2	OUTLET, 120V 15A
3	99887	1	CAPACITOR, 12.5 MFD
4	90418	1	OUTLET, 12V DC
5	84543C	4	SCREW, 3.5 x 18mm Lg. Phillips Head
6	99860	2	BAR, Retaining
7	75207D	1	CIRCUIT BREAKER, 15A AC Man. Reset
8	83514	1	CIRCUIT BREAKER, 10A DC Auto Reset
9	84198	1	CAP, Circuit Breaker

Not For Reproduction

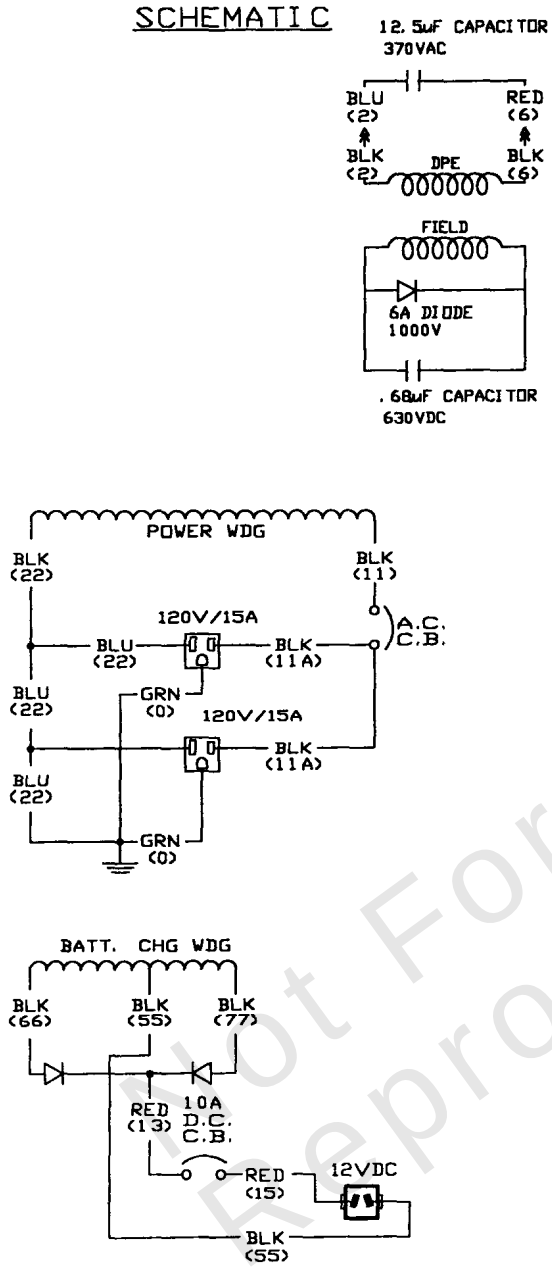

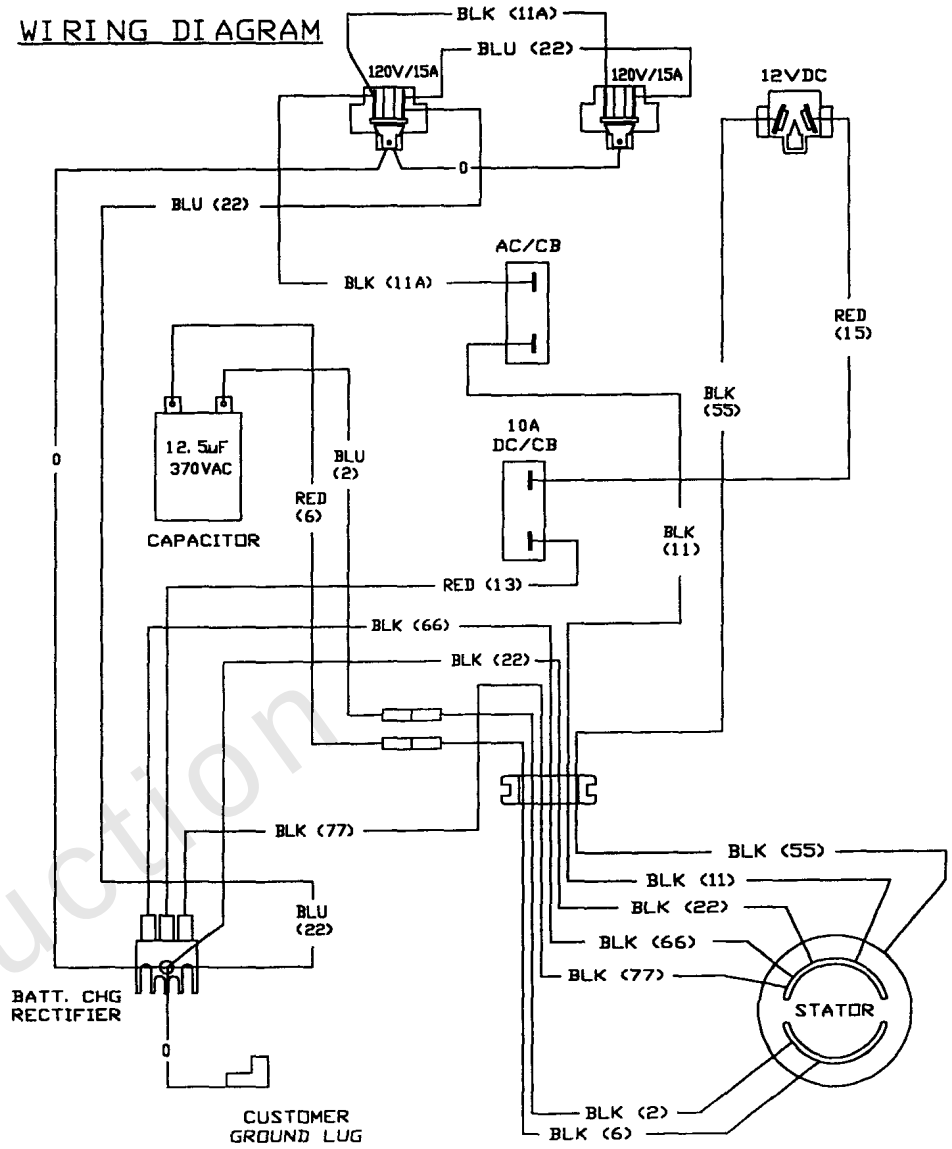

Not For Reproduction

Electrical Data

REF NO	PART NO	QTY	DESCRIPTION
--	-----		Wiring Diagram/Schematic only
--	-----		WARNING - Generator Voltage Could Cause Electrical Shock or Burn Resulting in Death Or Serious Injury. To Avoid Electrical Shock Or Burn Hazard, Please Refer Service To Qualified Personnel.

Not For Reproduction

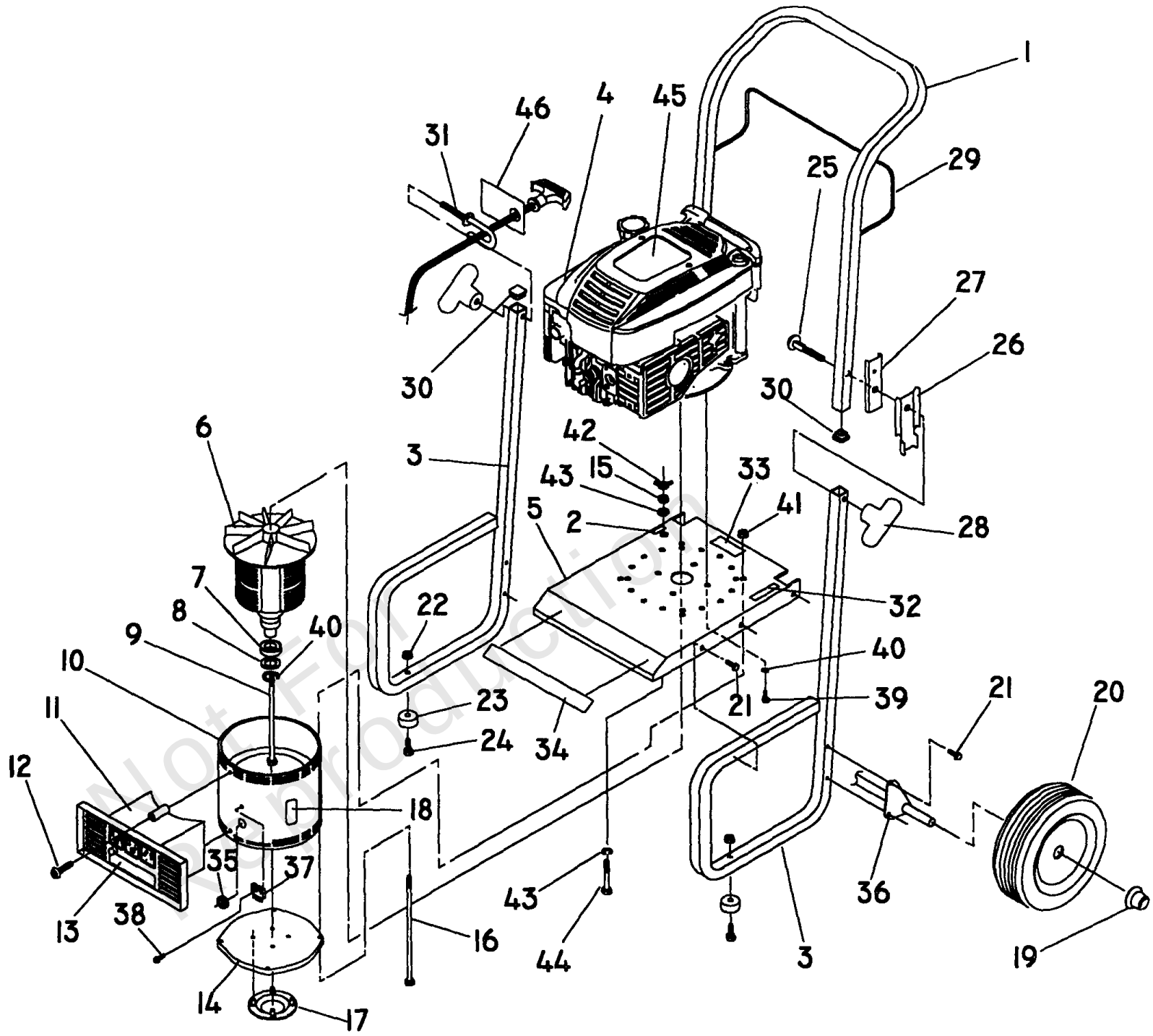

Not For Reproduction

Generator

REF NO	PART NO	QTY	DESCRIPTION
1	99685	1	HANDLE
2	67210A	1	DECAL, Ground
3	99681	2	FRAME
4	B1936	1	ENGINE, 5.5 h.p. - VS BRIGGS
5	99684	1	PLATE, Base
6	99687J	1	ASSEMBLY, Rotor
7	65791	1	BEARING
8	67451	1	WASHER, Flat Special
9	99849	1	HHCS, 5/16-24 x 5"
10	99688J	1	ASSEMBLY, Stator
11	99884	1	ASSEMBLY, Control Panel
12	99896	2	PPHMS, #10 x 1-1/4 Self Drill
13	B1308	1	DECAL, Control Panel
14	99686	1	PLATE, RBC End Stator
15	49813	1	NUT, M6-1.0 Hex
16	66449L	4	BOLT, Stator
17	99850	1	COVER, Bearing
18	78817	1	DECAL, Data Sheet (back side)
19	75402	2	PUSHNUT, 1/2" Dia
20	B1760	2	ASSEMBLY, 10" Wheel & Tire
21	86292	10	HHCS, #10-16 x 3/4" Self Drill
22	52858	2	NUT, M8- 1.25 Locking
23	87841	2	MOUNT, Vibration
24	39414	2	HHCS, M8 - 1.0 x 35
25	B1343	1	BOLT, 1/4 - 20 x 2" Lg. Carriage
26	97082	2	CLIP, Handle
27	99368	2	PLATE, SS Anti-Scratch
28	B1337	2	KNOB, Handle
29	21724	1	HOLDER, Ext. Cord
30	81895	4	CAP, Plug 3/4" Square
31	97998	1	EYE BOLT, Square Neck
32	20566	1	DECAL, 1-800 Number
33	93639	1	DECAL, Danger Instructions
34	20024	1	DECAL, Start Instructions
35	89685	1	GROMMET, Control Box
36	B1769	1	ASSEMBLY, Axle
37	65795	1	RECTIFIER, Battery Charge
38	66849A	1	SCREW, M5 - 0.8 x 20 Taptite
39	86307	4	HHCS, 5/16-24 x 3/4"
40	22129	5	WASHER, 5/16 Lock
41	77395	4	NUT, M6 Flange Lock
42	87680	1	NUT, M6 - 10 Wing
43	-----	2	WASHER, M6 - 1/4 Shakeproof
44	40945	1	SHCS, M6 - 1.0 x 20
45	81905	1	DECAL, Mega 2500
46	70453	1	TAG, Oil Fill

Not For Reproduction

Copyright © Briggs & Stratton. All Rights reserved

Hardware Identification & Torque Specifications

Torque Specification Chart

FOR STANDARD METRIC MACHINE HARDWARE (Tolerance ± 20%)

Property Class	5.6 Class 5.6		8.8 Class 8.8		10.9 Class 10.9		12.9 Class 12.9	
Size Of Hardware	*in/lbs* **ft/lbs**	Nm.	*in/lbs* **ft/lbs**	Nm.	*in/lbs* **ft/lbs**	Nm.	*in/lbs* **ft/lbs**	Nm.
M3	*5.88*	*.56*	*13.44*	*1.28*	*19.2*	*1.80*	*22.92*	2.15
M4	*13.44*	*1.28*	*30.72*	*2.90*	*43.44*	*4.10*	*52.56*	4.95
M5	*26.4*	*2.50*	*60.96*	*5.75*	**5.97**	*8.10*	**7.15**	9.7
M6	*44.64*	*4.3*	**7.3**	*9.9*	**10.3**	*14*	**12.1**	16.5
M7	**5.2**	*7.1*	**12.1**	*16.5*	**16.9**	*23*	**19.9**	27
M8	**7.7**	*10.5*	**17.7**	*24*	**25**	*34*	**29**	40
M10	**15**	*21*	**35**	*48*	**50**	*67*	**59**	81
M12	**26**	*36*	**61**	*83*	**86.2**	*117*	**103**	140
M14	**42**	*58*	**101**	*132*	**136**	*185*	**162**	220
M16	**64**	*88*	**147**	*200*	**210**	*285*	**250**	340
M18	**89**	*121*	**202**	*275*	**287**	*390*	**346**	470
M20	**126**	*171*	**290**	*390*	**405**	*550*	**486**	660
M22	**169**	*230*	**390**	*530*	**559**	*745*	**656**	890
M24	**217**	*295*	**497**	*375*	**708**	*960*	**840**	1140
M27	**320**	*435*	**733**	*995*	**1032**	*1400*	**1239**	1680
M30	**435**	*590*	**995**	*1350*	**1401**	*1900*	**1681**	2280
M33	**590**	*800*	**1349**	*1830*	**1902**	*2580*	**2278**	3090
M36	**759**	*1030*	**1740**	*2360*	**2441**	*3310*	**2935**	3980
M39	**988**	*1340*	**2249**	*3050*	**3163**	*4290*	**3798**	5150

The guides and ruler furnished below are designed to help you select the appropriate hardware.

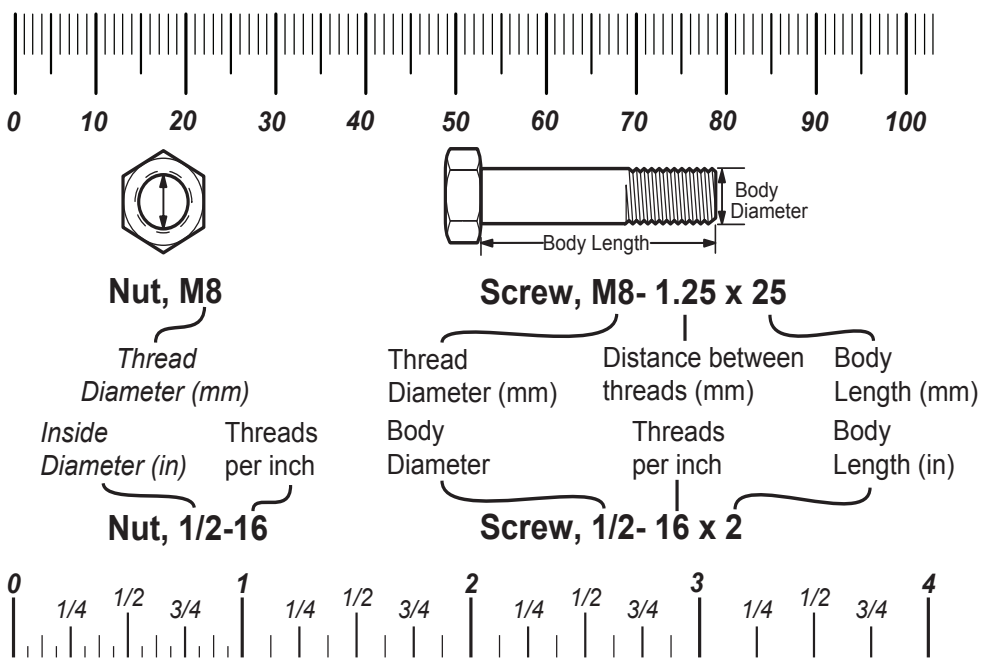

Standard Hardware Sizing

When a washer or nut is identified as **1/2"** (M8), this is the *Nominal size*, meaning the *inside diameter* is 1/2 inch (8mm metric thread diameter); if a second number is present it represents the *threads per inch* (distance between threads).

When bolt or capscrew is identified as **1/2 - 16 x 2"** (M8 - 1.25 x 50), this means the *Nominal size*, or body diameter is 1/2 inch (8mm metric thread diameter), the second number,16, represents the *threads per inch, (distance between threads).* The final number is the body length of the bolt or screw, 2 inches (50mm).

Torque Specification Chart

FOR STANDARD MACHINE HARDWARE (Tolerance ± 20%)

Hardware Grade	No Marks SAE Grade 2		SAE Grade 5		SAE Grade 8	
Size Of Hardware	*in/lbs* **ft/lbs**	Nm.	*in/lbs* **ft/lbs**	Nm.	*in/lbs* **ft/lbs**	Nm.
8-32	*19*	2.1	*30*	3.4	*41*	4.6
8-36	*20*	2.3	*31*	3.5	*43*	4.9
10-24	*27*	3.1	*43*	4.9	*60*	6.8
10-32	*31*	3.5	*49*	5.5	*68*	7.7
1/4-20	*66*	7.6	**8**	10.9	**12**	16.3
1/4-28	*76*	8.6	**10**	13.6	**14**	19.0
5/16-18	**11**	15.0	**17**	23.1	**25**	34.0
5/16-24	**12**	16.3	**19**	25.8	**29**	34.0
3/8-16	**20**	27.2	**30**	40.8	**45**	61.2
3/8-24	**23**	31.3	**35**	47.6	**50**	68.0
7/16-14	**30**	40.8	**50**	68.0	**70**	95.2
7/16-20	**35**	47.6	**55**	74.8	**80**	108.8
1/2-13	**50**	68.0	**75**	102.0	**110**	149.6
1/2-20	**55**	74.8	**90**	122.4	**120**	163.2
9/16-12	**65**	88.4	**110**	149.6	**150**	204.0
9/16-18	**75**	102.0	**120**	163.2	**170**	231.2
5/8-11	**90**	122.4	**150**	204.0	**220**	299.2
5/8-18	**100**	136	**180**	244.8	**240**	326.4
3/4-10	**160**	217.6	**260**	353.6	**386**	525.0
3/4-16	**180**	244.8	**300**	408.0	**420**	571.2
7/8-9	**140**	190.4	**400**	544.0	**600**	816.0
7/8-14	**155**	210.8	**440**	598.4	**660**	897.6
1-8	**220**	299.2	**580**	788.8	**900**	1,244.0
1-12	**240**	326.4	**640**	870.4	**1,000**	1,360.0

NOTES

1. These torque values are to be used for all hardware excluding: locknuts, self-tapping screws, thread forming screws, sheet metal screws and socket head setscrews.
2. Recommended seating torque values for locknuts:
   a. for prevailing torque locknuts - use 65% of grade 5 torques.
   b. for flange whizlock nuts and screws - use 135% of grade 5 torques.
3. Unless otherwise noted on assembly drawings, all torque values must meet this specification.

Common Hardware Types

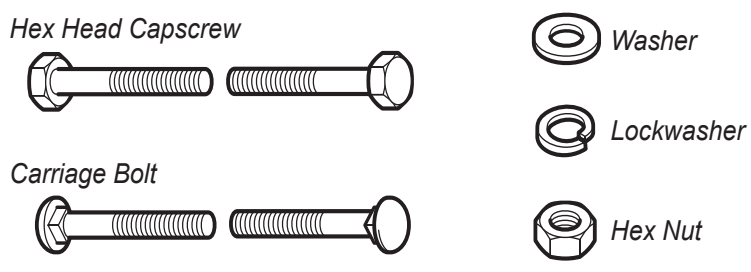

Wrench & Fastener Size Guide

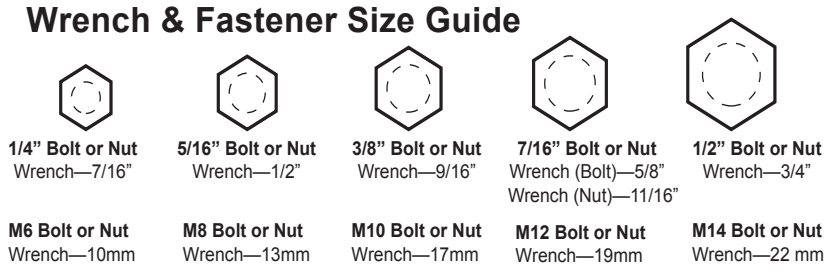

Copyright © Briggs & Stratton. All Rights reserved